Remote using instruction

Note: When compressor shut off, it needs 3 minutes to restart.

Mode selection: Select working mode, economic operation, if room temperature lower than 21℃, into heating mode. If higher than 27℃, into cooling mode.
Fan speed selection: AUTO, HIGH, LOW, MIDDLE four modes, in dry mode, fan speed always be slow.
Temperature setting: Be able to set from 16℃-30℃. It will not response in auto mode or dry mode.
Timer selection: Timing shutdown, timing start up and no timing.
Timer setting: It can be between 1-16 hours.
Swing: Swing on or off.
Sleep: It will shutdown after 8 hours.
Too warm/Too cool: Effective in economic mode. Be able to adjust the setting temperature 1℃ up or down after press it.
ON/OFF: Control on or off.

Main board instrunction

1 : MODE DISPLAY
POWER ON
AUTO MODE: Temperature directories displays AU
COOL MODE: Cool indicator light on, temperature directories display setting temperature and room temperature, when setting it displays setting temperature that by remote, and then displays room temperature.
DRY MODE: Temperature directories displays dr
FAN MODE: Temperature directories displays FA
HEAT MODE: Heat indicator light on, temperature directories display setting temperature and room temperature, when setting it displays setting temperature that by remote, and then displays room temperature. When defrosting, Temperature directories displays dF , indicate that air-conditioner is in defrosting state.
SHUT DOWN: All indicators off.
SLEEP: When in sleep mode, the luminance will be dark, make people have a good rest, setting temperature adjust automatically and shut down after 8 hours.
TIMER ON: Temperature directories displays 0n and flashes, it means air-conditioner in timer-on.
TIMER OFF: Temperature directories displays the current mode, it means air-conditioner in OFF-MODE.

2 : REMARKS
IR RECEIVER: To receive the instruction from the remote.
Emergency button: Without remote, press this button can start air-conditioner. Press it, it will in cool mode, setting temperature will be 26℃, fan speed and direction automatically. Press again, it will in heat mode, setting temperature is 20℃, fan speed and direction automatically, press again, off the air-conditioner. Circulating operation.

3 : Compressor instruction
In heat or cool mode, when indicator light of heat and cool flash, it means air-conditioner get to the setting temperature, or compressor in 3 minutes protection state, compressor shut down now, when the indicator light on, it means compressor start.

Failure indication
When the room temperature sensor has a fault, temperature directories displays" E1", please check whether the sensor connected or not.
When the pipe temperature sensor has a fault, temperature directories displays"E2", please check whether the sensor connected or not.

Parts List

Item	Unit	Quantity
PCB	Pcs	1
Display panel	Pcs	1
Transformer	Pcs	1
Temperature sensor	Pcs	2
Remote control	Pcs	1
Combicon	Set	1

Optional AUTO Restart Function

You can choose whether to use AUTO restart function depending on the practical application, setting method as the following:
● **Step 1:** When the system is powered off, press and hold the emergency button Ⓐ for 5 seconds. Now temperature display area appears "P1" symbol.
● **Step 2:** Repeat to press the emergency button Ⓐ, to choose whether to use AUTO restart function. At the meantime, temperature display area will express it by 00 or 01
00 : Indicate AUTO restart function unused(the default setting 00).
01 : Indicate AUTO restart function used.
● **Step 3:** Finalized the setting, no need to press buttons to confirm. The system will save it and return off state automatically after 10 seconds.

QD-U30A+

- New upgrade digital display panel, nice and easy to disassemble.
- Auto restart function(optional)
- Accurately and stably controlling water level, with pumping water function.
- Five working mode(Auto, Cooling, Drying, Ventilating, Heating)
- High, medium, low three fan speed.
- Accurately and stably controlling temperature.
- Accurately AUTO fan.
- Outdoor fan controlled independently.
- Sleep function
- Double sensor, colorful plug, easy connection
- Preventing cold wind on heating mode.
- Efficient and intelligent defrosting function.
- Preventing the coil too heat and cold
- Self-diagnosis failure function
- Protecting the compressor with 3 minutes delay
- Emergency start function

If you install it in inverter air conditioner,please don't connect our output of the compressor relay to the inverter compressor.

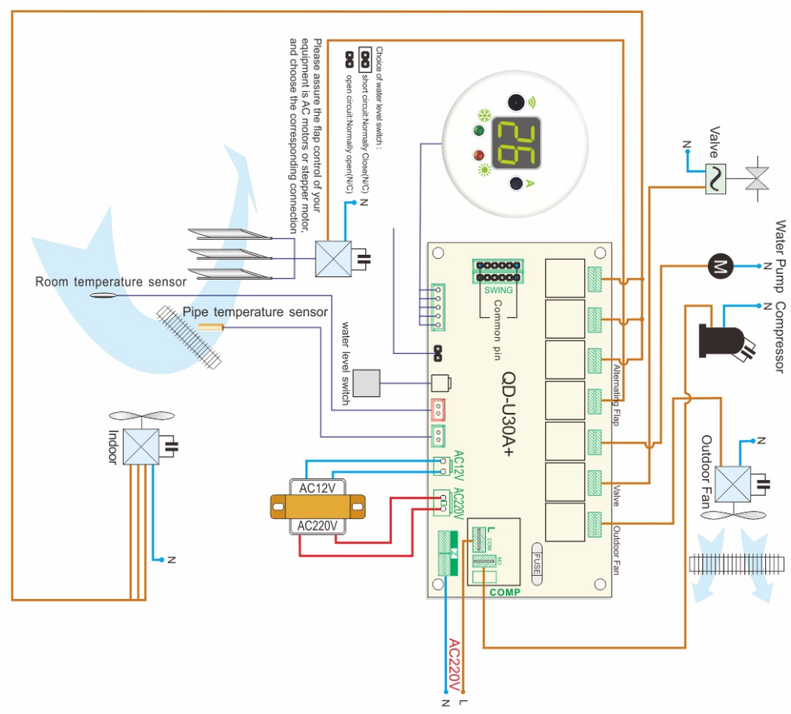

3 phase compressor connect

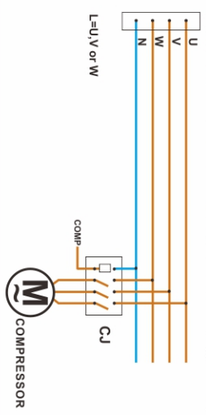

Three-phase compressor,suggueset using QD-P01E Anti-Phase Protector

★ This main board has no electric heating function, if the matched remote control has electric heating button, then it is invalid.

Before electrifying, please make sure the connection is strictly according to the interface function described in the manual, and ensure its connection is stable and reliable.

1、Avoid strong light before IR receiver.
2、The common pins of swing socket are 12V output. The common pin of step motor should be inserted into one of the common pins of swing socket. If the direction of step motor is wrong, insert the common pin of step motor to other common pin of swing socket.

UNIVERSAL CEILING CASSETTE A/C CONTROL SYSTEM

QD-U30A+

MADE IN CHINA

UNIVERSAL CEILING CASSETTE A/C CONTROL SYSTEM

Auto restart function (optional)

QD-U30A+

- New upgrade digital display
- Auto restart function (optional)
- Outdoor fan controlled independently

QD-U30A+

Please install by certificated technician.
Please test the system before installation.
Please avoid strong light before IR receiver